RESEARCH ARTICLE OPEN ACCESS

A Survey on Bluetooth Technology and Its Features

S.Shahina [1], G.Shanmugapriya [2]
Final Year,B.Tech,IT.
Velammal College of Engineering and Technology, Madurai
Tamil Nadu –India

ABSTRACT

Bluetooth is technology which is highly used for transfer the data from one device to another device without any cable connection that is using wireless connection. This technology will works within a short range of distance between two devices. The device may vary like one device may be a smart phone and another device may be a computer or laptop or any electronic device which contains a Bluetooth chips. Now Bluetooth technology have different versions and based on the version the data transfer speed may vary. The latest version of Bluetooth 5.0

Keywords:- Bluetooth, Wireless, Data Transfer, Media,

I. INTRODUCTION

BLUETOOTH

Bluetooth is a wireless protocol utilizing short-range communications technology facilitating data transmission over short distances from fixed and/or mobile devices, creating wireless personal area networks (PANs). The intent behind the development of Bluetooth was the creation of a single digital wireless protocol, capable of connecting multiple devices and overcoming problems arising from synchronization of these devices.

Bluetooth protocol stack

"Bluetooth is defined as a layer protocol architecture consisting of core protocols, cable replacement protocols, telephony control protocols, and adopted protocols".

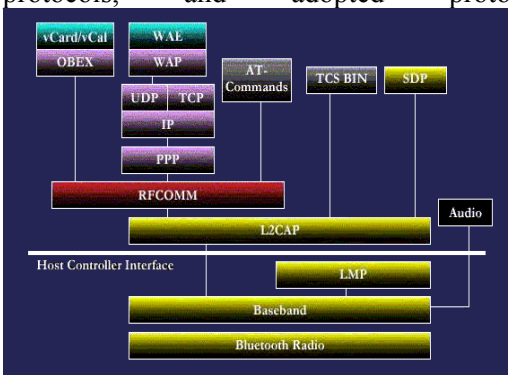

Core protocols

Bluetooth's core protocols form a five-layer stack, consisting of the following:

Bluetooth Radio – specifics details of the air interface, including frequency, frequency hopping, modulation scheme, and transmission power.

Baseband – concerned with connection establishment within a piconet, addressing, packet format, timing, and power control.

Link Manager Protocol (LMP) – establishes the link setup between Bluetooth devices and manages ongoing links, including security aspects (e.g. authentication and encryption), and control and negotiation of baseband packet size

Logical Link Control and Adaptation Protocol (L2CAP) – adapts the upper-layer protocols to the baseband layer, providing both connectionless and connection-oriented services.

Service Discovery Protocol (SDP) – handles device information, services, and queries for service characteristics between two or more Bluetooth devices.

Cable replacement protocol

Radio frequency communications (RFCOMM) is the cable replacement protocol used to create a virtual serial port used to make replacement of cable technologies transparent through minimal modification of existing devices. RFCOMM provides for binary data transport and emulates EIA-232 (formerly RS-232) control signals over the Bluetooth baseband layer.

Telephony control protocol

Telephony control protocol-binary (TCS BIN) is the bit-oriented protocol that defines the call control signaling for the establishment of voice and data calls between Bluetooth devices. Additionally, "TCS BIN defines mobility management procedures for handling groups of Bluetooth TCS devices"

Adopted protocols

Adapted protocols are defined by other standards-making organizations and incorporated into Bluetooth's protocol stack., allowing Bluetooth to create protocols only when necessary. The adopted protocols include:

Point-to-Point Protocol (PPP) – Internet standard protocol for transporting IP datagrams over a point-to-point link

TCP/IP/UDP – Foundation Protocols for TCP/IP protocol suite

Object Exchange Protocol (OBEX) – Session-layer protocol for the exchange of objects, providing a model for object and operation representation

Wireless Application Environment / Wireless Application Protocol (WAE/WAP) – WAE specifies an application framework for wireless devices and WAP is an open standard to provide mobile users access to telephony and information services.

II. BLUETOOTH DEVICES

Bluetooth exists in many products, such as telephones, modems and headsets. The technology is useful when transferring information between two or more devices that are near each other in low-bandwidth situations. Bluetooth is commonly used to transfer sound data with telephones (i.e. with a Bluetooth headset) or byte data with hand-held computers (transferring files).

Bluetooth protocols simplify the discovery and setup of services between devices. Bluetooth devices can advertise all of the services they provide. This makes using services easier because more of the security, network address and permission configuration can be automated than with many other network types.

Mobile 	**Phone**	With a Bluetooth mobile phone, you can do the following: • Connect to your PC to transfer files and perform a backup. • Exchange business cards, calendar entries and photos with other users • Use a Bluetooth headset for hands-free calling • Use the phone as a wireless modem from your Bluetooth-enabled laptop or PDA • Connect to a Bluetooth GPS unit for satellite navigation
Handheld	**PDA**	There's a wide range of Bluetooth-enabled

	Pocket PC or Palm OS handheld computers on the market. You can use Bluetooth for the following: • Connect to your PC or laptop to transfer files. • Share data with other users - including contacts, diary entries, documents and photos • Connect to the Internet for surfing or email, via a Bluetooth-enabled modem or access point • Connect to a Bluetooth GPS unit for satellite navigation
Phone Headset 	Hands-free calling from your mobile phone is possible with the aid of Bluetooth. OK, so you may end up looking like a Borg, but combining a Bluetooth mobile phone with a headset means you can use your phone without holding it to your ear, and without all those messy headphone wires.
USB dongles and adapters 	Most PCs and laptops don't have built-in support for Bluetooth, but for around £15, you can add Bluetooth via a special USB Bluetooth adapter.
GPS Navigation 	Connect your PDA, laptop or mobile phone via Bluetooth to a wire-free GPS receiver - these get a fix on your location from orbiting navigation satellites and overlays your position onto a map and/or route planner. For for on real-time mapping and route planning using Bluetooth, see our GPS page.
Modem / Access point 	Allows users to connect to the Internet using Bluetooth. The D-Link DBT-900AP Bluetooth Access Point is designed to extend LAN network services to Bluetooth-enabled devices such as laptop computers and PDAs. This Access Point provides a new solution for wireless connection of multiple users and devices on a Bluetooth network.
Printer / print adapter	If you're looking to print without wires,

here are some Bluetooth options:

- Look for to a dedicated Bluetooth printer, such as the Samsung SSP-2040, or the older HP DeskJet 995C or HP DeskJet 450wbt
- Alternatively, you can buy a Bluetooth print adapter that lets you use Bluetooth with your existing printer. These enable wireless printing of data or photos from your Bluetooth-enabled desktop PC, laptop, PDA and mobile phone. You'll find a selection of Bluetooth print adapters

at online stores.

- Finally, consider a portable Bluetooth printer. No expensive ink cartridges, send pics from your phone's camera by Bluetooth for near instant pics from this handheld rechargeable printer.

III. USING BLUETOOTH AS PASSENGER INTERFACE

Passengers travelling with **FLYWAY®** will notice 3 interfaces with the system where the Bluetooth technology is involved:

1. beamcars at station terminals
2. When booking or ordering When commandeering beamcars for their use
3. When entering and leaving the beamcars (they might notice the synchronization between the cabin doors and the cubicle doors).

Applying Bluetooth to FLYWAY´s passenger interface

A "typical" station

We will here see how well the Bluetooth technology would fit the needs of an automatic commuter system, by applying it on the "typical" **FLYWAY®**station shown below.It has **4** berths (or individual stops) in each direction of travel, and **8** information terminals. These terminals are equipped with a monitor and some kind of keyboard, maybe also a microphone and a small loudspeaker. The microphone and loudspeaker are for emergency use, however, and are not part of the system we are going to discuss here.

These terminals are part of the booking system and the information system. They are also Bluetooth-units, with transceivers that are able

to communicate with the small mobile units carried be the travelers on the platform

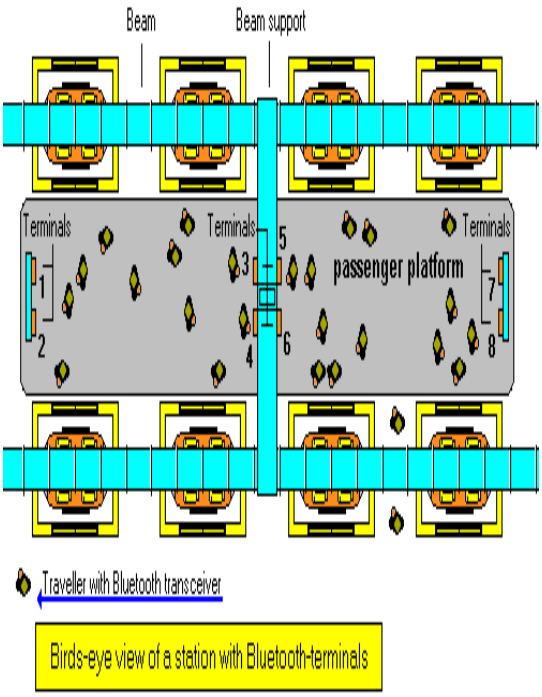

IV. GENERAL SITUATIONS

The Bluetooth specification states that **any** unit can initiate a piconet communication. **That** unit then becomes **master.** Illustration gives a simplified overview of the different states that a Bluetooth unit can assume. The reality is a bit more complex. For **FLYWAY´s** purposes, the ideal is for each of these terminals to be masters in their own piconets. In our example, the 8 terminals at the station would thus be able to serve 8 * 7 = 56 travelers at any one moment.

When contact is attempted by a traveler´s unit, the terminal could be in any of 3 states:

1. Idle, in which case it is in STANDBY-mode.
2. Already master of a piconet with less than 7 slaves

Already master of a piconet with7 slaves

In case **1**, the traveler´s unit initially assumes the role of master, since this is the unit that takes the initiative. But they quickly change roles, and for the duration of the session, the **terminal** is the master.

In case **2**, the traveler´s unit joins the existing piconet.

In case **3**, the terminal won´t answer. The passenger will have to move on the platform, to (hopefully) get within range of a terminal that can take on one more slave unit. Or, he can keep trying for contact at the place where he is; the waiting period before a Bluetooth terminal releases a slave and can take on a new one is usually a matter of 2-5 seconds.
Generally, when manually activated by the traveler, the mobile unit will start "sniffing" for an available terminal. An "available" terminal is any terminal (within range) that has an address to spare, i.e. its quota of **7** slave units is not filled, **or** an idle terminal. Finding such a terminal, it will join that piconet, or start a new piconet and switch to a slave-role, as already described. It will be assigned an address by the terminal, which here will be acting as a master.

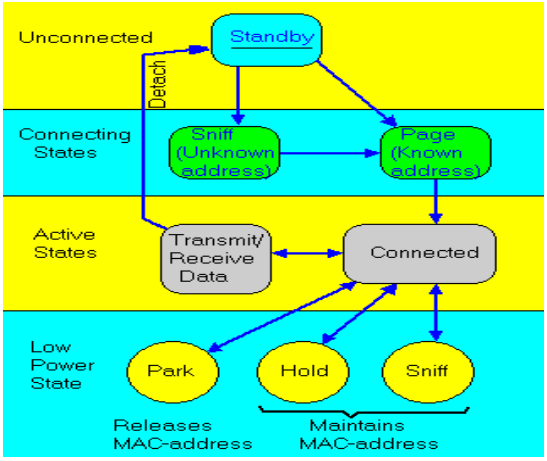

The Interface between Bluetooth-terminals and the FLYWAY´s Station LAN

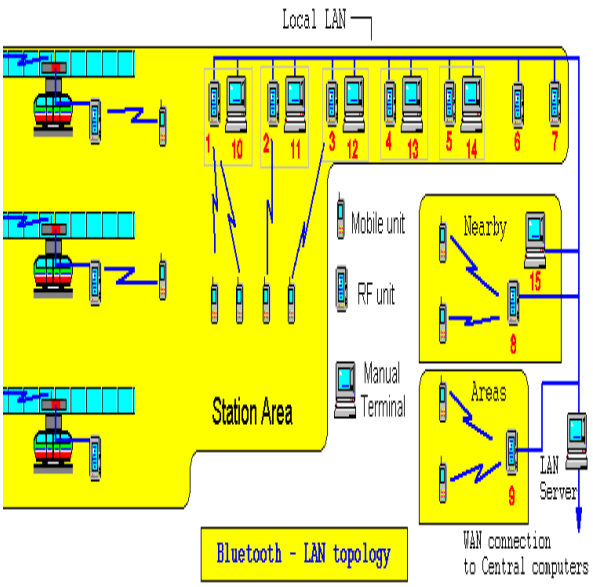

In the **FLYWAY®** system, each station area has its own **LAN,** or Local Area Network, which, using the TCP/IP-protocol, ties all computerized units together in Ethernet-fashion.

Figure above gives a topological overview. Although the terminal and the stationary Bluetooth-unit might be physically integrated, they are **individually** addressed by the local LAN that they belong to, i.e. the terminal has one LAN-address, the Bluetooth-unit another address. Thus, there is no reason why Bluetooth-units could not be physically separated from the terminals, as are units **6 through 9** in the illustration. They could even be placed in nearby localities, as shown by units **8 & 9**. The terminals could be placed at nearby shopping-malls and public libraries, for instance.

So, the Bluetooth units would serve the same purpose as the manual terminals; i.e. as an interface towards the travelers. Over the LAN they have contact with the station´s LAN-server, which coordinate activities at the station. Some activities are local; the server will for instance act if the same prospective passenger both tries to use a manual terminal and his Bluetooth-unit simultaneously. The server will then order the Bluetooth-unit to break off.

Most activities involves the booking computer, which means that the messages have to be sent over the router to the system WAN, and on to the booking computer. Answers from this computer would then have to be relayed to the right terminal.

Figure shows how the LAN is connected to the system WAN.

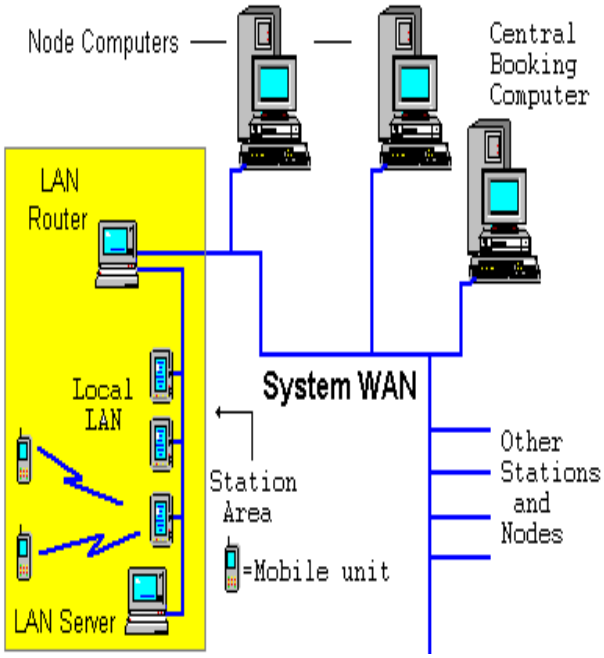

The Interface between Passengers and Beamcars

The **beamcars** will also require Bluetooth-units. These units are at the other end in contact with local nodes and with the booking computer through **arials** mounted on the propulsion vehicles (i.e. inside the beams). Information exchange between local Bluetooth-units at a station (or at other places) and the beamcars will thus take place over several links in a rather complex chain.

The information would travel from the stationary terminal to the server for the local LAN, then to the local node and/or the booking computer over the system WAN (The WAN here is the high-capacity communications network that ties the whole beam traffic system

together). From the local node, the information is then carried over radiolink inside the beam to the beamcar.

The booking computer will use the WAN up to the local node, and from there on by radiolink to the car. The only **stationary** units that have **direct** access to the beamcars are thus the RF-stations connected to each **node computer.** This is schematically shown in **figure.**

Given this complex chain of communication, it can easily be seen that it would be more advantageous for the travelers to be able to communicate **directly** with the beamcars, using their Bluetooth-units, rather than having to commandeer a car by way of the stations Bluetooth-terminals. Thus, the need for the beamcars to be equipped with Bluetooth-units.

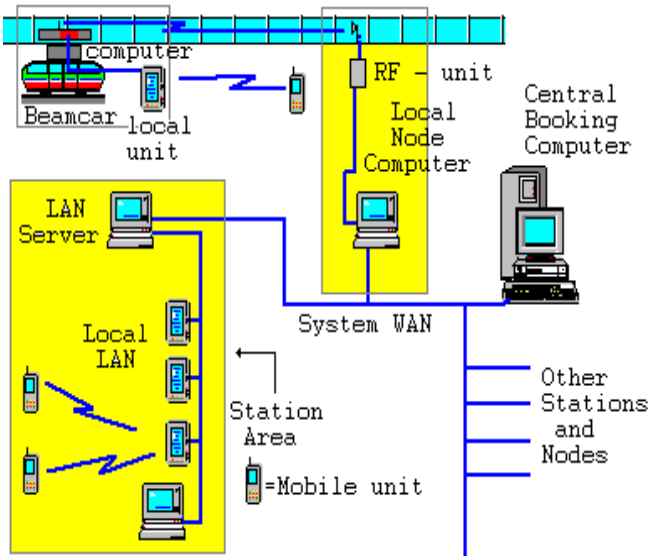

The Interface between Beamcars and Station Cubicles

As has been seen, the beamcar cabins have bluetooth-units for **direct** passenger interface. This is necessary for those stops that do not include the **FLYWAY** cubicles (the cubicles are not mandatory in **FLYWAY!** It would, however, be logical to extend this facility to also include the doors of the station cubicles where the cabins alight, to allow passengers to enter and leave. As stated elsewhere on this site, these cubicles are meant to protect people from accidents resulting from lowering beamcabins. The **cubicles** thus have **doors,** that have to open and close in **conjunction** with the beamcabin doors.This opening and closing could probably be facilitated manually, with the passengers themselves making sure that all doors are properly closed (otherwise the beamcar won´t take off). But **direct** Bluetooth communication between cabin and cubicle is deemed to be both simpler and more reliable to implement. So, the cubicle doors will only open and close when the cabin´s computer tells them to. And this will only happen when the **right** cabin is positioned in the **right** cubicle, and when the cabin is ready to maneuver its own doors.

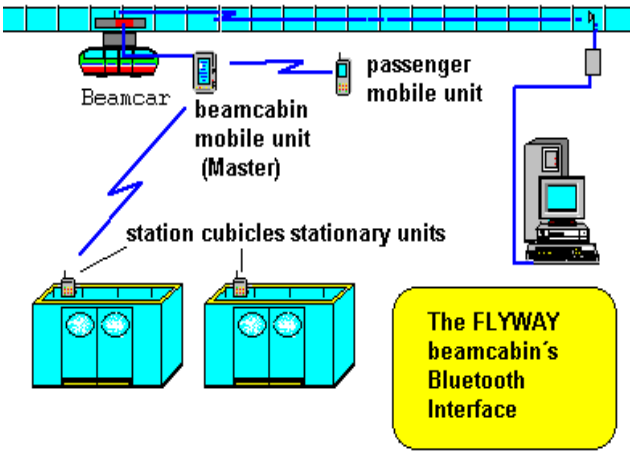

Some Scenarios

We will here look at 4 general scenarios

where the traveller has a mobile Bluetooth unit of some kind, and uses it to book a beamcar for travel with the beam network:

1. **A** traveler at a station wants access to a terminal (for **manually** booking a beamcar, calling a beamcar or requesting information).
2. **A** traveler at a station does not need **physical** access to the terminal. He/she only needs the terminal to relay the information sent from or requested by his mobile unit.

3. **A** traveler at a station will use his Bluetooth unit to commandeer **any** beamcar that is already waiting.
4. **A** traveler at a station will use his Bluetooth unit to commandeer a **particular** beamcar that is already waiting.

Let´s see how these scenarios would be handled.

A traveler wants **manual** access to a terminal´s keyboard. In this case, the travelers´ unit assumes the role of master and sends a query-message. The first terminal within range with available capacity that answers, will also notify the other terminals (over their shared LAN) that it will handle the call. After identifying the traveler´s unit and satisfying itself that the traveler has right of access, it will (if necessary) change roles with the traveler´s unit and become master. Following this, the traveler, by way of the mobile unit, indicates that he/she wants manual access to the terminal, whereupon the terminal will make itself available (by, for instance, switching on the monitor and unlocking the keyboard).
At this point, it stops functioning as a Bluetooth-unit, and becomes a regular, LAN-attached computer unit. It should be noted that a terminal in this manner can act as a master for up to 7 mobile units, while **at the same time** functioning as a manual terminal. As stated elsewhere, from the LAN´s point of view the manual part and the Bluetooth part are **2 different units** with individual addresses, even though they are physically mounted together .

For practical reasons, the manual LAN-terminal will only be available for **one** traveler at a time. It will continue to function as a Bluetooth-terminal, but if **manual** access to the terminal is requested, the mobile unit will be informed of the address of nearest free manual terminal, if any is available, whereupon the session terminates. Preferably, however, the mobile unit would then **automatically** contact this free terminal, without the traveler having to intervene. It would also be neccessary for the mobile unit to indicate on its display if that particular terminal is out of range.

When such a free terminal for manual use has been contacted and made available, the mobile unit would announce to the traveler:

1. **Which terminal** it is (it would be neat if the terminal itself would flash a light at the same time, to draw the traveler´s attention).
2. **A short 4-digit code**, that the traveler would have to key in on the terminal. In this way, the system is reasonably assured that the **right** person is using the terminal.

2.A traveler at a station does not need **physical** access to the terminal. This case would be handled as in the foregoing case, except that all information exchange is between the mobile unit and the Bluetooth-terminal. Depending on how the mobile unit functions, some (or all) information sent to the terminal could be pre-programmed into the unit, requiring correspondingly less intervention by the traveler. A convenient way for a traveler who does not have (or does not want to use) pre-programmed information in his unit, would be to use the unit as when sending SMS-messages over a GSM-phone.

3.A traveler at a station will use his unit to commandeer **any** beamcar that is waiting. In this case, it would be more purposefull if the mobile unit could contact the beamcar´s Bluetooth-unit **directly,** and not use the station´s terminals. This would be a point-to-point communication, because the mobile unit would "sniff" for a beamcar as described above, and even if more than one car responded, the mobile unit would pick only **one** of these, and establish a connection.
The criteria for this selection could vary; the mobile unit could, for instance, pick the car with the **strongest** response signal, indicating that this is (probably) the nearest car. When the traveler has picked a car, the mobile unit would then ask the car to make itself available (meaning that the car migt have to lower itself to

the ground and/or open its doors). Before it complies with this request, the beamcar would have to ascertain who the traveler is and that he has the right to use the requested service.

4.A traveler at a station will use his unit to commandeer a **particular** beamcar that is waiting. This case is similar to the foregoing, except that the passenger´s mobile unit would "query" for the address of the beamcar, instead of "sniffing". Only **one** car would thus answer (i.e. the beamcar which has the right identification), provided the car is within range. The mobile unit would then ask the car to make itself available, whereupon the car would have to check with the mobile unit who the traveler is and match his request with the information already received from
the booking computer, before either opening its doors or sending some kind of message.
This means that if the car has arrived at the requested address, and finds a berth free for use, it would land and wait for a specific time for the traveler to make a request for the car. But the doors of the car (and the berth, if a **FLYWAY** cubicle is used) would remain **shut,** and would not open for anyone except the right traveler. If the specified time limit expires, however, and the traveler does not appear, the beamcar would be free for use by somebody else.

V. CONCLUSION

This paper is concluded predicting informations about the future of Bluetooth.

Future of Bluetooth

- **Broadcast Channel**: enables Bluetooth information points. This will drive the adoption of Bluetooth into mobile phones, and enable advertising models based around users pulling information from the information points, and not based around the object push model that is used in a limited way today.

- **Topology Management**: enables the automatic configuration of the piconet topologies especially in scatternet situations that are becoming more common today. This should all be invisible to the users of the technology, while also making the technology just work.

- **Alternate MAC PHY**: enables the use of alternative MAC and PHY's for transporting Bluetooth profile data. The Bluetooth Radio will still be used for device discovery, initial connection and profile configuration, however when lots of data needs to be sent, the high speed alternate MAC PHY's will be used to transport the data. This means that the proven low power connection models of Bluetooth are used when the system is idle, and the low power per bit radios are used when lots of data needs to be sent.

- QoS improvements: enable audio and video data to be transmitted at a higher quality, especially when best effort traffic is being transmitted in the same piconet.

Other developed versions thet would emerge are high-speed **Bluetooth Bluetooth 3.0** and **Bluetooth low energy**

REFERENCES

[1] "How Bluetooth Technology Works". Bluetooth SIG.
[2] "The Bluetooth Blues", Information Age (2001-05-24).
[3] "Bluetooth 2.1 Offers Touch Based Pairing, Reduced Power Consumption" Michael Oryl (2007-03-15).
[4] "Bluetooth". The Bunker.
[5] "BlueBug". Trifinite.org.
[6] http://www.wattpad.com/93370-bluetooth_wattpad/page/2
[7] http://www.academypublisher.com/ijrte/vol01/no02/ijrte0102189191.pdf
[8] http://www.slideshare.net/abinashdash71/bluetooth-35726755

[9] https://www.academia.edu/9272927/VOICE_CONTROLLED_ROBOT_THROUGH_ANDROID

[10] http://www.statemaster.com/encyclopedia/Bluetooth